F-a SPHERICAL MIRROR INSTALLATION MANUAL

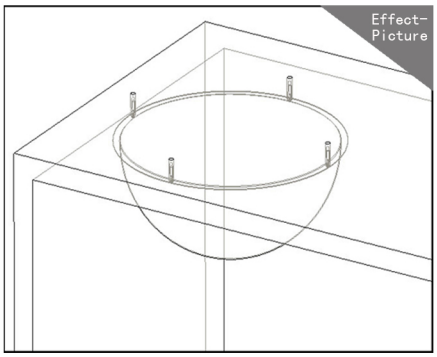

Warm Suggestion

Before installation, the mirror surface is protected by a layer of film. Please remove it when you are sure that all of the parts have been installed well!

Installation Steps

Step 1:
Drill the holes in the wall according to the installation holes size of Spherical Mirror.

Step 2:
Install the Plastic Swells into the drilled holes.

Step 3:
Put M4 Bolts into the installation holes, and connect them with Plastic Swells, then fix the Spherical Mirror well.

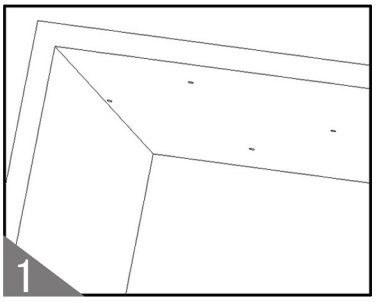

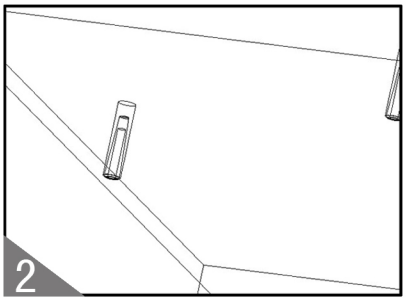

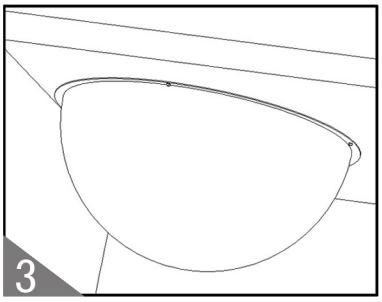

Caution

(1)**Periodical clean**:After a term the mirror must be cleaned carefully by a soft cloth damped with water, then dry it with cotton or soft tissue;The PC mirror should be cleaned by water and then air-dry it spontaneously.
(2)**Precaution**:Prohibit using any escharotic or ammoniate on the mirror surface. (3)**The final product is standard.**

F-a SPHERICAL MIRROR INSTALLATION MANUAL

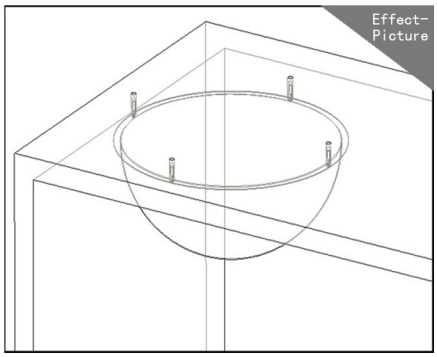

Warm Suggestion

Before installation, the mirror surface is protected by a layer of film. Please remove it when you are sure that all of the parts have been installed well!

Installation Steps

Step 1:
Drill the holes in the wall according to the installation holes size of Spherical Mirror.

Step 2:
Install the Plastic Swells into the drilled holes.

Step 3:
Put M4 Bolts into the installation holes, and connect them with Plastic Swells, then fix the Spherical Mirror well.

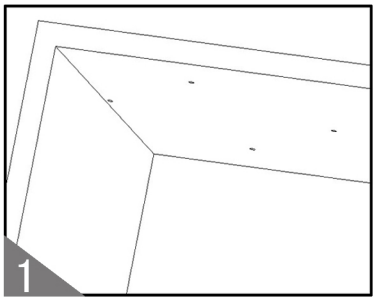

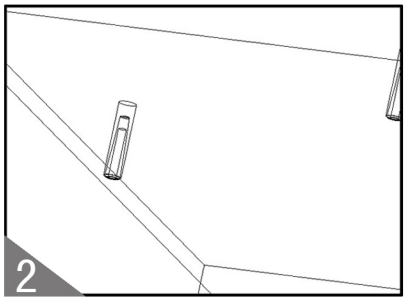

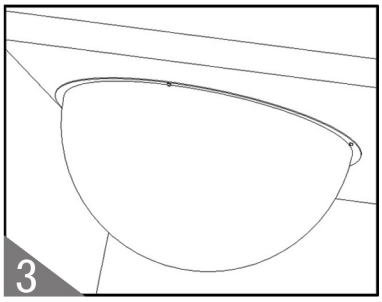

Caution

(1)**Periodical clean**:After a term the mirror must be cleaned carefully by a soft cloth damped with water, then dry it with cotton or soft tissue;The PC mirror should be cleaned by water and then air-dry it spontaneously.
(2)**Precaution**:Prohibit using any escharotic or ammoniate on the mirror surface. (3)**The final product is standard.**